1 Quick Guide

1

1.1 Safety

1.1.1 Warnings

High Voltage Warning:
The voltage of the adjustable frequency drive is dangerous whenever it is connected to line power. Incorrect installation of the motor or adjustable frequency drive may cause damage to the equipment, serious injury or death. Consequently, it is essential to comply with the instructions in this manual as well as local and national rules and safety regulations.

Warning:
Touching the electrical parts may be fatal - even after the equipment has been disconnected from line power. Also make sure that other voltage inputs have been disconnected (linkage of DC intermediate circuit). Be aware that there may be high voltage on the DC link even when the LEDs are turned off. Before touching any potentially live parts of the adjustable frequency drive, wait at least 4 minutes.

Leakage Current:
The ground leakage current from the adjustable frequency drive exceeds 3.5 mA. According to IEC 61800-5-1, a reinforced protective ground connection must be ensured by means of a min. of 0.016 in² [10 mm²] Cu or an additional PE wire - with the same cable cross-section as the line power wiring, which must be terminated separately.
To increase safety, install an RCD
Residual Current Device:
This product can cause a DC current in the protective conductor. Where a residual current device (RCD) is used for extra protection, only an RCD of Type B (time delayed) shall be used on the supply side of this product. See also Danfoss Application Note on RCD, MN.90.GX.YY.
Protective grounding of the adjustable frequency drive and the use of RCDs must always follow national and local regulations.

Motor Thermal Protection:
Protection against Motor overload is not included in the factory setting. If this function is required, set par. 128 *Motor Thermal Protection* to data value *ETR trip* or data value *ETR warning*. For the North American market: The ETR functions provide overload protection of the motor, class 20, in accordance with NEC.

Installation at high altitudes:
For altitudes above 6,600 feet [2 km], please contact Danfoss regarding PELV.

1

1.1.2 Safety Instructions

- The adjustable frequency drive must be disconnected from line power if repair work is to be carried out. Check that the line power supply has been disconnected and the prescribed time has passed before removing motor and line power plugs.
- Make sure the adjustable frequency drive is properly grounded.
- Protect users against supply voltage.
- Protect the motor against overloading according to national and local regulations.
- The ground leakage current exceeds 3.5 mA. For ELCB types, please see application note MN.90.GX.YY.
- The [STOP/RESET] key on the control panel of the adjustable frequency drive does not disconnect the equipment from line power and is thus not to be used as a safety switch.
- Note that the adjustable frequency drive has more voltage inputs than L1, L2 and L3 when DC bus terminals are used. Check that all voltage inputs are disconnected and that the prescribed time has passed before repair work is commenced.

1.1.3 Warning against unintended start

1. The motor can be brought to a stop by means of digital commands, bus commands, references or a local stop, while the adjustable frequency drive is connected to line power. If personal safety considerations make it necessary to ensure that no unintended start occurs, these stop functions are not sufficient.
2. While parameters are being changed, the motor may start. Consequently, the stop key [STOP/RESET] must always be activated, following which data can be modified.
3. A motor that has been stopped may start if faults occur in the electronics of the adjustable frequency drive, or if a temporary overload or a fault in the supply line power or the motor connection ceases.

1.1.4 Use on Isolated Line Power

See section *RFI Switch* in the instruction manual regarding use on isolated line power.

It is important to follow the recommendations regarding installation on IT line power, since sufficient protection of the complete installation must be observed. Carelessness when using the relevant monitoring devices for IT line power may result in damage.

1.2 Introduction

Use this Quick Guide to carry out quick and EMC-compliant installation of the adjustable frequency drive in five steps.

Read the safety section before installing the unit.

NOTE!
The Instruction Manual, MG. 27.AX.YY, gives further examples of installation and describes all functions in detail.
The Design Guide, MG. 27.EX.YY, contains extensive information.

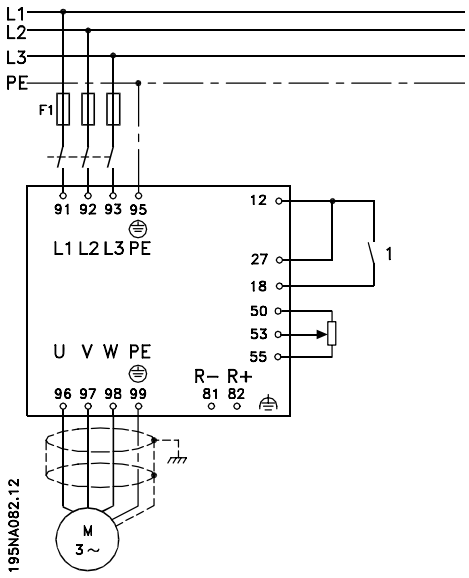

1.2.1 Abbreviations

ELCB	Ground Leakage Circuit Breakers
NO	Normally open
NC	Normally closed
PD2	Dual phase (for 2822, 2840 that only run 3-phase as standard D2), 220–240 V
RCD	Residual Current Device

1.2.2 Available Literature

NOTE!
This quick guide contains only the very basic information necessary for installing and running the drive.
For more information, please consult the VLT 2800 Design Guide, MG.27.EX.YY

1

Title	Literature no.
VLT 2800 Instruction Manual	MG.27.AX.YY
VLT 2800 Design Guide	MG.27.EX.YY
VLT 2800 Data Sheet	MD.27.AX.YY
Mounting Instruction for VLT 2800	MI.28.AX.YY
VLT 2800 Filter Instruction	MI.28.BX.YY
Precise Stop	MI.28.CX.YY
Cold Plate	MI.28.DX.YY
VLT 2800 NEMA 1 Terminal Covering	MI.28.EX.YY
VLT 2800 DeviceNet Cable	MI.28.FX.YY
VLT 2800 Blue Star Condensing Unit	MI.28.GX.YY
VLT 2880 - 2882 Spare Part Instruction	MI.28.HX.YY
Wobble Function	MI.28.JX.YY
VLT 2800 LCP Remote-mounting Kit	MI.56.AX.YY
User Instruction for LOP	MI.90.EX.YY
Brake Resistor	MI.90.FX.YY
Profibus DP Manual	MG.90.AX.YY
VLT 2800 DeviceNet Manual	MG.90.BX.YY
Metasys N2 Manual	MG.90.CX.YY
Profibus Manual	MG.90.EX.YY
Output Filter Manual	MG.90.NX.YY
Brake Resistor Manual	MG.90.OX.YY
MCT-10 Manual	MG.10.RX.YY
Modbus RTU Manual	MG.10.SX.YY
Protection against Electrical Hazards	MN.90.GX.YY

X = Revision Number, Y = Language code

Application notes can be found on *http://www.danfoss.com/BusinessAreas/DrivesSolutions/Documentations/Technical+Documentation.htm*

1.2.3 Approvals

1.2.4 Disposal Instructions

Equipment containing electrical components may not be disposed of together with domestic waste.
It must be separately collected with electrical and electronic waste according to local and currently valid legislation.

1.3 Mechanical Installation

VLT 2800 adjustable frequency drives allow side-by-side installation on a wall in any position as the units do not require ventilation on the side. Because of the need for cooling, there must be 3.9 in [10 cm] free air passage above and below the adjustable frequency drive.

All units with enclosure IP 20 must be integrated in cabinets and panels. IP 20 is not suitable for remote mounting. In some countries, e.g., in the USA, units with enclosure NEMA 1 are approved for remote mounting.

NOTE!
With the IP 21 solution all units require a minimum of 4 in [100 mm] air on each side. This means that side-by-side mounting is **NOT** allowed.

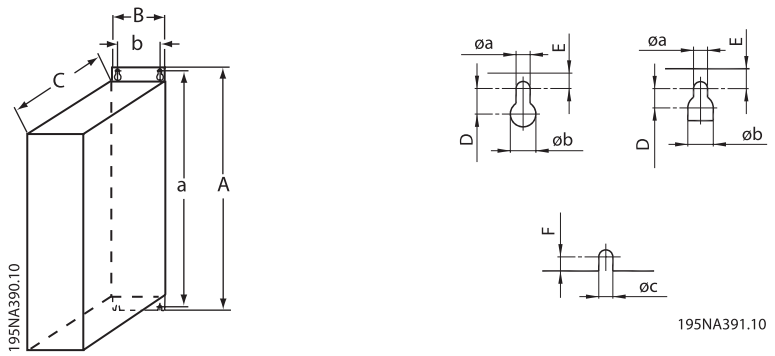

Size mm	**A**	**a**	**B**	**b**	**C**	**D**	**E**	**øa**	**øb**	**F**	**øc**
S2											
VLT 2803 - 2815	200	191	75	60	168	7	5	4.5	8	4	4.5
D2											
VLT 2803 - 2815	200	191	75	60	168	7	5	4.5	8	4	4.5
VLT 2822*	267.5	257	90	70	168	8	6	5.5	11	4.5	5.5
VLT 2840*	267.5	257	140	120	168	8	6	5.5	11	4.5	5.5
PD2											
VLT 2822	267.5	257	140	120	168	8	6	5.5	11	4.5	5.5
VLT 2840	505	490	200	120	244	7.75	7.25	6.5	13	8	6.5
T2											
VLT 2822	267.5	257	90	70	168	8	6	5.5	11	4.5	5.5
VLT 2840	267.5	257	140	120	168	8	6	5.5	11	4.5	5.5
T4											
VLT 2805 - 2815	200	191	75	60	168	7	5	4.5	8	4	4.5
VLT 2822 - 2840	267.5	257	90	70	168	8	6	5.5	11	4.5	5.5
VLT 2855 - 2875	267.5	257	140	120	168	8	6	5.5	11	4.5	5.5
VLT 2880 - 2882	505	490	200	120	244	7.75	7.25	6.5	13	8	6.5

Table 1.1: * Only 3-phase

Drill holes in accordance with the measurements given in the above table. Please note the difference in unit voltages.
Retighten all four screws.
Fit the decoupling plate to the power cables and the ground screw (terminal 95).

1

1.3.1 Motor coils (195N3110) and RFI 1B filter (195N3103)

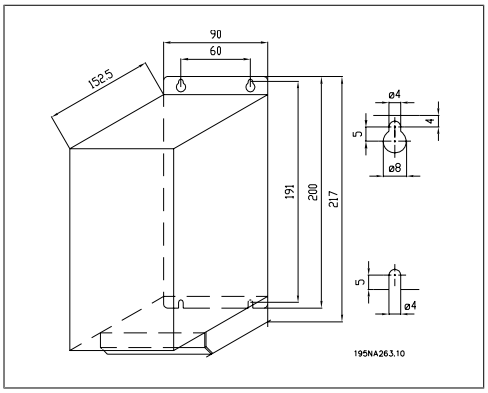

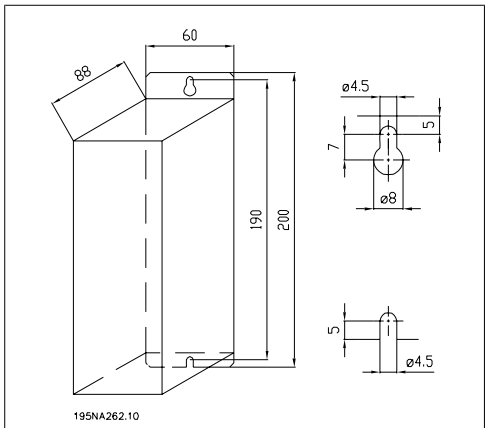

Figure 1.1: Motor coils

1.3.2 Terminal cover

The drawing below gives the dimensions for NEMA 1 terminal covers for VLT 2803-2875. Dimension 'a' depends on the unit type.

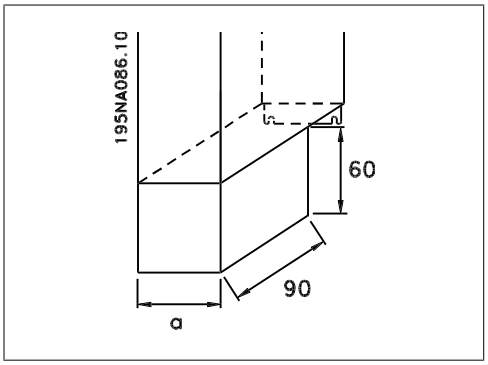

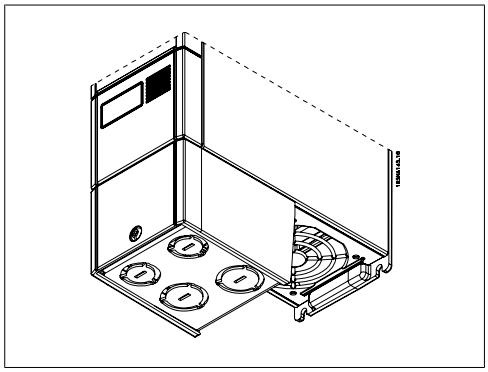

1.3.3 IP 21 solution

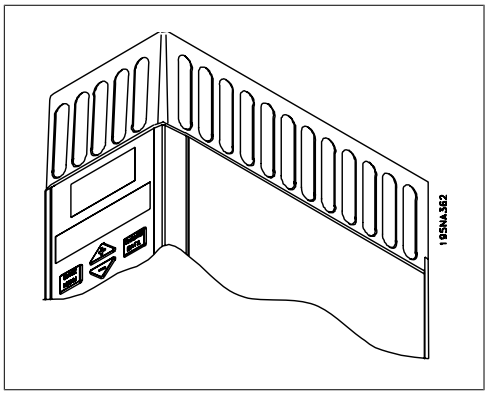

Type	Code number	A	B	C
VLT 2803-2815 200–240 V, VLT 2805-2815 380–480 V	195N2118	47	80	170
VLT 2822 200–240 V, VLT 2822-2840 380–480 V	195N2119	47	95	170
VLT 2840 200–240 V, VLT 2822 PD2, TR1 2855-2875 380–480 V	195N2120	47	145	170
TR1 2880-2882 380–480 V, VLT 2840 PD2	195N2126	47	205	245

Table 1.2: Dimensions

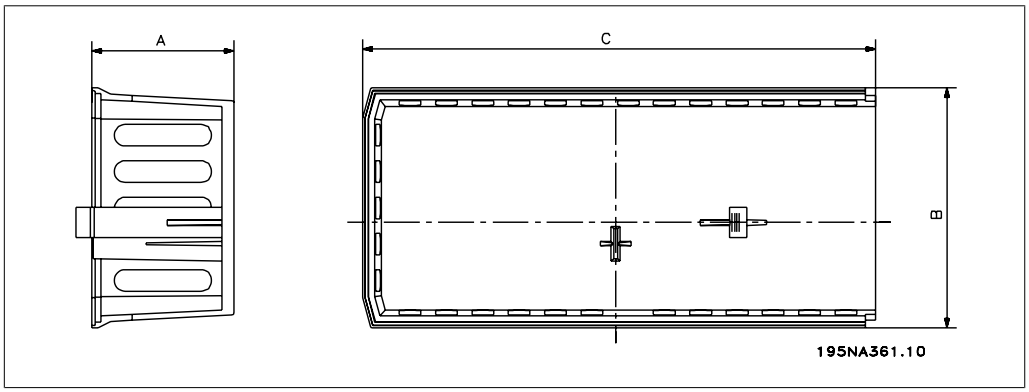

1

1.3.4 EMC filter for long motor cables

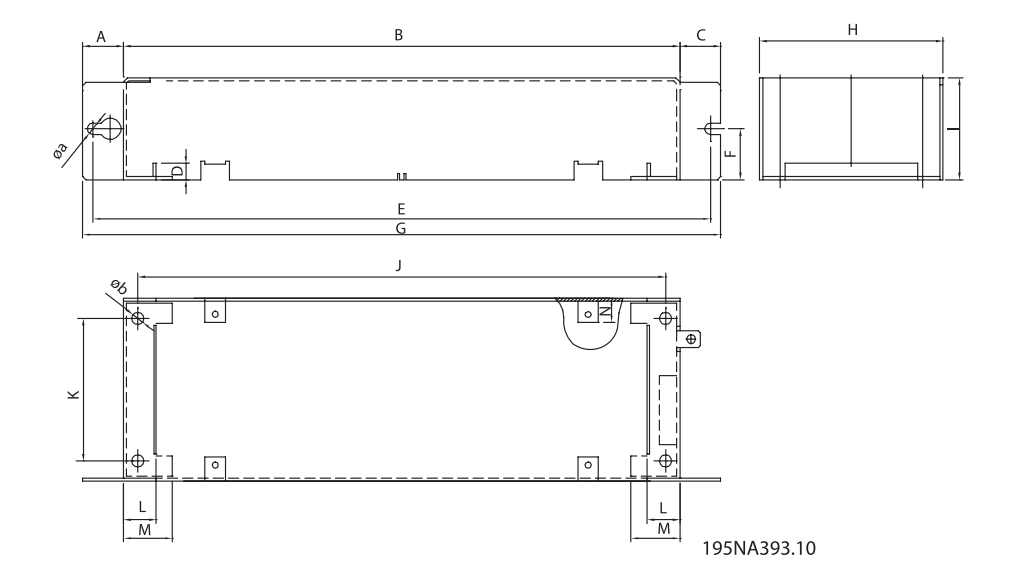

Filter	Dimensions							
192HA719	**A**	**B**	**C**	**øa**	**D**	**E**	**F**	**G**
	20	204	20	5.5	8	234	27.5	244
	H	**I**	**øb**	**J**	**K**	**L**	**M**	**N**
	75	45	6	190	60	16	24	12
192H4720	**A**	**B**	**C**	**øa**	**D**	**E**	**F**	**G**
	20	273	20	5.5	8	303	25	313
	H	**I**	**øb**	**J**	**K**	**L**	**M**	**N**
	90	50	6	257	70	16	24	12
192H4893	**A**	**B**	**C**	**øa**	**D**	**E**	**F**	**G**
	20	273	20	5.5	8	303	25	313
	H	**I**	**øb**	**J**	**K**	**L**	**M**	**N**
	140	50	6	257	120	16	24	12

1.4 Electrical Installation

1.4.1 Electrical Installation in General

NOTE!
All cabling must comply with national and local regulations on cable cross-sections and ambient temperature. Copper conductors required, (140°–167°F [60°–75°C]) recommended.

Details of terminal tightening torques.

VLT	Terminals	Torque (Nm)	Torque, Control Cables (Nm)
2803 - 2875	Power line power brake	0.5–0.6	0.22–0.25
	Ground	2 - 3	
2880 - 2882, 2840 PD2	Power line power brake	1.2–1.5	
	Ground	2 - 3	

Table 1.3: Tightening of terminals.

1.4.2 Power Cables

NOTE!
Please note that the power terminals can be removed.

Connect line power to the line power terminals of the adjustable frequency drive, i.e., L1, L2 and L3 and the ground connection to terminal 95.

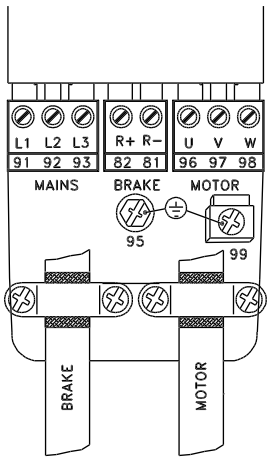

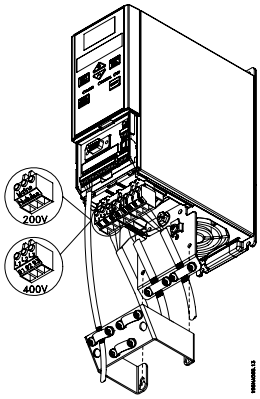

VLT 2803 - VLT 2815

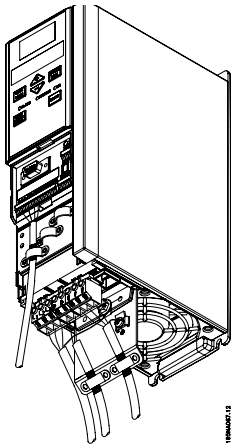

VLT 2822 - VLT 2840

1

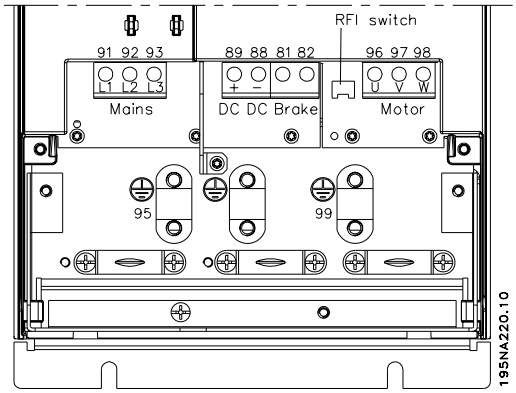

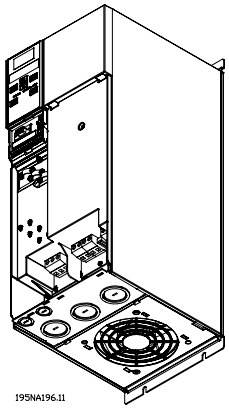

VLT 2880 - VLT 2882

Fit shielded/armored cable from the motor to the motor terminals of the adjustable frequency drive, i.e., U, V, W. The shield ends in a shield connector.

1.4.3 AC line input connections

NOTE!
Please note that at 1 x 220–240 Volt, the neutral wire must be attached to terminal N (L2) and the phase wire must be connected to terminal L1 (L1).

No.	N(L2)	L1(L1)	(L3)	AC line voltage 1 x 220–240 V
	N	L1		
No.	95			Ground connection

No.	N(L2)	L1(L1)	(L3)	AC line voltage 3 x 220–240 V
	L2	L1	L3	
No.	95			Ground connection

No.	91	92	93	AC line voltage 3 x 380–480 V
	L1	L2	L3	
No.	95			Ground connection

NOTE!
Please make sure that the AC line voltage fits the AC line voltage of the adjustable frequency drive, which can be seen from the nameplate.

400-Volt units with RFI filters may not be connected to line power supplies in which the voltage between phase and ground is more than 300 Volts. Please note that for the IT line power and the delta ground, the AC line voltage can exceed 300 Volts between phase and ground. Units with type code R5 (IT line power) can be connected to line power supplies with up to 400 V between phase and ground.

See *Technical data* for correct dimensioning of cable cross-section. See also the section entitled *Galvanic isolation* in the Instruction Manual for further details.

1.4.4 Motor connection

Connect the motor to terminals 96, 97, 98. Connect ground to terminal 99.
See *Technical data* for correct dimensioning of cable cross-section.

All types of three-phase asynchronous standard motors can be connected to an adjustable frequency drive. Normally, small motors are star-connected (230/400 V, Δ/ Y).

NOTE!
In motors without phase insulation paper, an LC filter should be fitted on the output of the adjustable frequency drive.

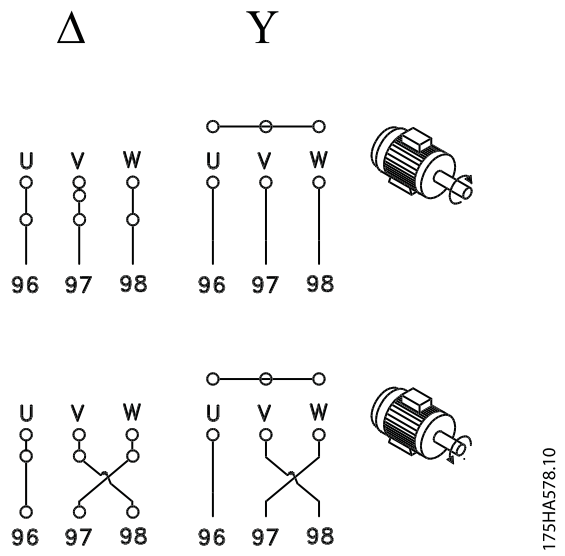

The factory setting is for clockwise rotation.
The direction of rotation can be changed by switching two phases on the motor terminals.

1.4.5 Parallel connection of motors

The adjustable frequency drive is able to control several motors connected in parallel.
Please consult the Instruction Manual for further information.

NOTE!
Be aware that the total cable length, listed in the section *EMC Emission*.

1

NOTE!
Parameter 107 *Automatic motor adaption, AMT* cannot be used when motors are connected in parallel. Parameter 101 *Torque characteristic* must be set to *Special motor characteristics* [8] when motors are connected in parallel.

1.4.6 Motor Cables

See *General Specifications* for correctly dimensioning motor cable cross-section and length. See *EMC Emissions* for relationship between length and EMC emission.
Always comply with national and local regulations on cable cross-section.

NOTE!
If an unshielded/unarmored cable is used, some EMC requirements are not complied with, see *EMC test results* in the Design Guide.

If the EMC specifications regarding emissions are to be complied with, the motor cable must be shielded/armored unless otherwise stated for the RFI filter in question. It is important to keep the motor cable as short as possible so as to reduce the noise level and leakage currents to a minimum. The motor cable shield must be connected to the metal cabinets of the adjustable frequency drive and the motor. The shield connections are to be made with the largest possible surface area (cable clamp). This is enabled by different installation devices in different adjustable frequency drives. Connecting with twisted shield ends (pigtails) is to be avoided, as these spoil the shielding effect at high frequencies. If it is necessary to break the shield to install a motor isolator or motor relay. The shield must be continued at the lowest possible HF impedance.

1.4.7 Motor thermal protection

The electronic thermal relay in UL approved variable frequency drives has received the UL approval for single motor protection, when parameter 128 *Motor thermal protection* has been set for *ETR Trip* and parameter 105 *Motor current,* $I_{M,N}$ has been programmed to the rated motor current (see motor nameplate).

1.4.8 Control Cables

Remove the front cover underneath the control panel. Place a jumper between terminals 12 and 27.

Control cables must be shielded/armored. The shield must be connected to the adjustable frequency drive chassis by means of a clamp. Normally, the shield must also be connected to the chassis of the controlling unit (use the instructions for the unit in question). In connection with very long control cables and analog signals, in rare cases depending on the installation, 50/60 Hz ground loops may occur because of noise transmitted from line power supply cables. In this con-

nection, it may be necessary to break the shield and possibly insert a 100 nF capacitor between the shield and the chassis.

See section entitled *Grounding of shielded/armored control cables* in the VLT 2800 Design Guide for the correct termination of control cables.

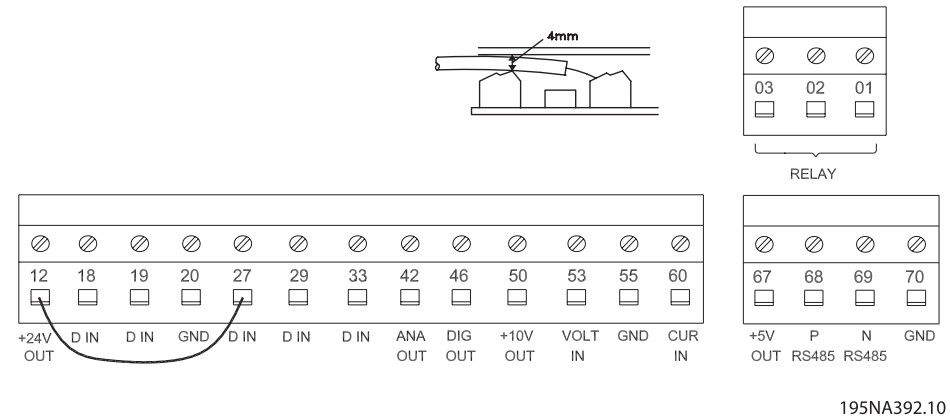

No.	Function
01-03	Relay outputs 01-03 can be used for indicating status and alarms/warnings.
12	24 V DC voltage supply.
18-33	Digital inputs.
20, 55	Common frame for input and output terminals.
42	Analog output for displaying frequency, reference, current or torque.
46[1]	Digital output for displaying status, warnings or alarms, as well as frequency output.
50	+10 V DC supply voltage for potentiometer or thermistor.
53	Analog voltage input 0–10 V DC.
60	Analog current input 0/4–20 mA.
67[1]	+ 5 V DC supply voltage to Profibus.
68, 69[1]	RS-485, Serial communication.
70[1]	Frame for terminals 67, 68 and 69. Normally, this terminal is not to be used.

1. The terminals are not valid for DeviceNet/CANopen. See also the DeviceNet manual, MG. 90.BX.YY for further details.

See parameter 323 *Relay output* for programming of relay output.

Nr.	01	-	02	1–2 make (NO)
	01	-	03	1–3 break (NC)

NOTE!
Please note that the cable jacket for the relay must cover the first row of control card terminals - otherwise the galvanic isolation (PELV) cannot be maintained. Max. cable diameter: 0.16 in [4 mm].

1

1.4.9 Grounding

Comply with the following guidelines during installation:

- Safety grounding: The drive has a high leakage current and must be grounded properly for safety reasons. Follow all local safety regulations.
- High frequency grounding: Keep grounding connections as short as possible.

Connect all grounding systems to ensure the lowest possible conductor impedance. The lowest possible conductor impedance is achieved by keeping the conductor as short as possible and by grounding with the greatest possible surface area. If multiple drives are installed in a cabinet, the cabinet backplate, which must be made of metal, should be used as a joint ground reference plate. The drives must be fitted to the backplate at the lowest possible impedance.

To achieve low impedance, connect the drive to the backplate with the drive fastening bolts. The backplate must be completely free from paint.

1.4.10 EMC emission

The following system results are achieved on a system consisting of a VLT Series 2800 with shielded/armored control cable, control box with potentiometer, shielded/armored motor cable and shielded/armored brake cable as well as an LCP2 with cable.

VLT 2803-2875	Emission			
	Industrial environment		Residential, commercial and light industry	
	EN 55011 class 1A		EN 55011 class 1B	
Setup	Cable-borne 150 kHz- 30 MHz	Radiated 30 MHz - 1 GHz	Cable-borne 150 kHz - 30 MHz	Radiated 30 MHz - 1 GHz
3 x 480 V version with 1A RFI filter	Yes 82 ft [25 m] shielded/armored	Yes 82 ft [25 m] shielded/armored	No	No
3 x 480 V version with 1A RFI filter (R5: For IT line power)	Yes 16 ft [5 m] shielded/armored	Yes 16 ft [5 m] shielded/armored	No	No
1 x 200 V version with 1A RFI filter [1.]	Yes 131 ft [40 m] shielded/armored	Yes 131 ft [40 m] shielded/armored	Yes 49 ft [15 m] shielded/armored	No
3 x 200 V version with 1A RFI filter (R4: For use with RCD)	Yes 66 ft [20 m] shielded/armored	Yes 66 ft [20 m] shielded/armored	Yes 23 ft [7 m] shielded/armored	No
3 x 480 V version with 1A+1B RFI filter	Yes 164 ft [50 m] shielded/armored	Yes 164 ft [50 m] shielded/armored	Yes 82 ft [25 m] shielded/armored	No
1 x 200 V version with 1A+1B RFI filter [1.]	Yes 328 ft [100 m] shielded/armored	Yes 328 ft [100 m] shielded/armored	Yes 131 ft [40 m] shielded/armored	No
VLT 2880-2882	Emission			
	Industrial environment		Residential, commerce and light industry	
	EN 55011 class 1A		EN 55011 class 1B	
Setup	Cable-borne 150 kHz- 30 MHz	Radiated 30 MHz - 1 GHz	Cable-borne 150 kHz - 30 MHz	Radiated 30 MHz - 1 GHz
3 x 480 V version with 1B RFI filter	Yes 164 ft [50 m]	Yes 164 ft [50 m]	Yes 164 ft [50 m]	No

1. For VLT 2822-2840 3 x 200–240 V, the same values apply as for the 480 V version with 1A RFI filter.

- **EN 55011: Emission**
  Limits and methods of measurement of radio disturbance characteristics of industrial, scientific and medical (ISM) high-frequency equipment.

Class 1A:
Equipment used in an industrial environment.
Class 1B:
Equipment used in areas with a public supply network (residential, commerce and light industry).

1.4.11 Extra protection

RCD relays/ELCBs, multiple protective grounding or grounding can be used as extra protection, provided that local safety regulations are complied with.

Three phase VLT adjustable frequency drives require an RCD type B. If an RFI filter is mounted in the drive and either the switch of the RCD or a manually operated switch is used to connect the drive to the AC line voltage, a time delay of minimum 40 ms is required (RCD type B).

If no RFI filter is mounted of a CI contactor is used for AC line input connections, no time delay is required.

1

Single phase VLT adjustable frequency drives require an RCD type A. There is no particular need for a time delay whether RFI filters are mounted or not.

See application note MN.90.GX.YY for further information on ELCBs.

1.4.12 EMC-compliant electrical installation

General points to be observed to ensure EMC-compliant electrical installation.

- Use only shielded/armored motor cables and shielded/armored control cables.
- Connect the shield to ground at both ends.
- Avoid installation with twisted shield ends (pigtails), since this ruins the shielding effect at high frequencies. Use cable clamps instead.
- It is important to ensure good electrical contact from the installation plate through the installation screws to the metal cabinet of the adjustable frequency drive.
- Use star-washers and galvanically grounding plates.
- Do not use shielded/armored motor cables in the installation cabinets.

The figure below shows EMC-compliant electrical installation, in which the adjustable frequency drive has been fitted in an installation cabinet and connected to a PLC.

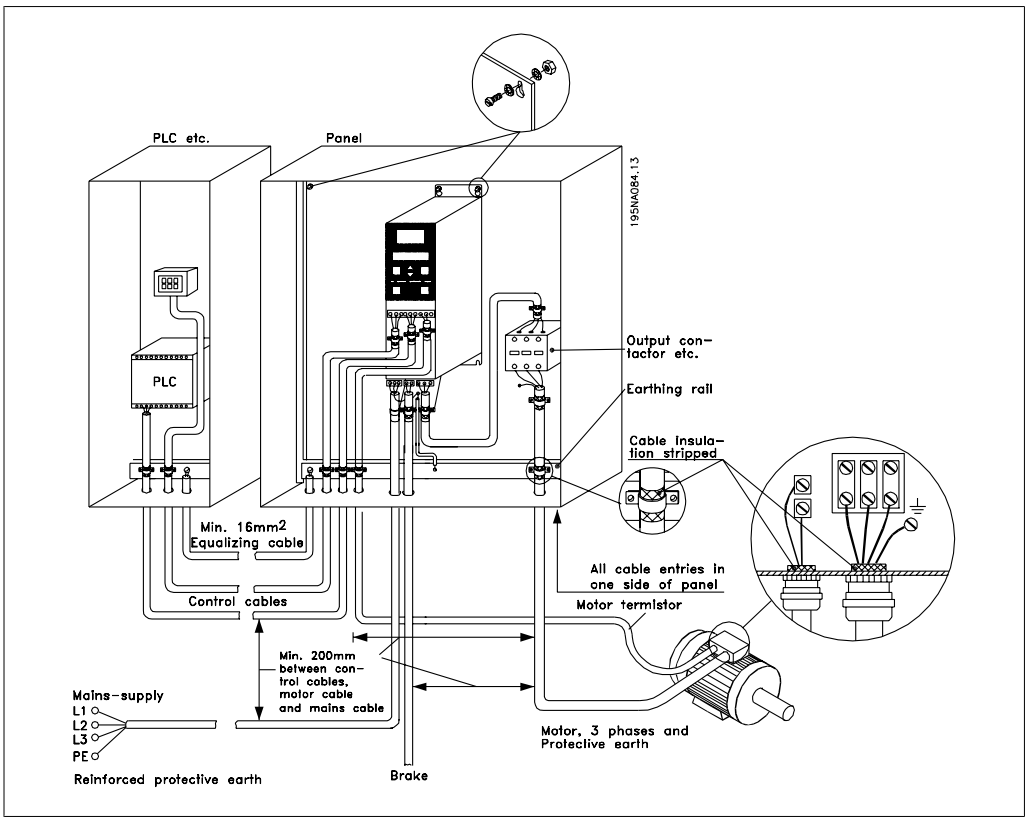

1.4.13 Fuses

Branch circuit protection:
In order to protect the installation against electrical and fire hazards, all branch circuits in an installation, switch gear, machines, etc. must be short-circuited and overcurrent protected according to national/international regulations.

Short circuit protection:
Danfoss recommends using the fuses mentioned in the following table to protect service personnel or other equipment in case of an internal failure in the unit or short-circuit on DC link. The adjustable frequency drive provides full short-circuit protection in case of a short-circuit on the motor or brake output.

Overcurrent protection:
Provide overload protection to avoid overheating of the cables in the installation. Overcurrent protection must always be carried out according to national regulations. Fuses must be designed for protection in a circuit capable of supplying a maximum of 100,000 A_{rms} (symmetrical), 480 V maximum.

Non UL compliance:
If UL/cUL is not to be complied with, Danfoss recommends using the fuses mentioned in the table below, which will ensure compliance with EN50178/IEC61800-5-1:
In case of malfunction, not following the fuse recommendation may result in damage to the adjustable frequency drive.

Alternative fuses 380–500 V drives										
VLT 2800	**Bussmann E52273**	**Bussmann E4273**	**Bussmann E4273**	**Bussmann E4273**	**Bussmann E4273**	**Bussmann E4273**	**SIBA E180276**	**Little Fuse E81895**	**Ferraz-Shawmut E163267/E2137**	**Ferraz-Shawmut E163267/E2137**
	RK1/JDDZ	J/JDDZ	T/JDDZ	CC/JDDZ	CC/JDDZ	CC/JDDZ	RK1/JDDZ	RK1/JDDZ	CC/JDDZ	RK1/JDDZ
2805-2820	KTS-R20	JKS-20	JJS-20	FNQ-R-20	KTK-R-20	LP-CC-20	5017906-020	KLS-R20	ATM-R25	A6K-20R
2855-2875	KTS-R25	JKS-25	JJS-25				5017906-025	KLS-R25	ATM-R20	A6K-25R
2880-2882	KTS-R50	JKS-50	JJS-50				5014006-050	KLS-R50	-	A6K-50R
Alternative Fuses 200–240 V drives										
2803-2822	KTN-R20	JKS-20	JJN-20				5017906-020	KLS-R20	ATM-R25	A6K-20R
2840	KTN-R25	JKS-25	JJN-25				5017906-025	KLS-R25	ATM-R20	A6K-25R

Table 1.4: Prefuses for UL application /cUL

1.4.14 RFI switch

Line power supply isolated from ground:
If the adjustable frequency drive is supplied from an isolated line power source (IT line power) or TT/TN-S line power with grounded leg, it is recommended to switch the RFI switch off (OFF). For further reference, see IEC 364-3. If optimum EMC performance is needed, parallel motors are

connected or the motor cable is longer than 82 ft [25 m], setting the switch to the ON position is recommended.
In OFF position, the internal RFI capacities (filter capacitors) between the chassis and the intermediate circuit are cut off to avoid damage to the intermediate circuit, and to reduce the ground capacity currents (according to IEC 61800-3).
Please also refer to the application note *VLT on IT line power*, MN.90.CX.02. It is important to use isolation monitors that are capable for use together with power electronics (IEC 61557-8).

NOTE!
The RFI switch is not to be operated with line power connected to the unit. Make sure that the line power supply has been disconnected before operating the RFI switch.
The RFI switch disconnects the capacitors galvanically from ground.

The switch Mk9, placed next to terminal 96, should be removed to disconnect the RFI-filter.
The RFI switch is only available on VLT 2880-2882.

1.5 Programming

1.5.1 Control Unit

On the front of the adjustable frequency drive there is a control panel divided into four sections.

1. Six-digit LED display.
2. Keys for changing parameters and shifting display function.
3. LEDs.
4. Keys for local operation.

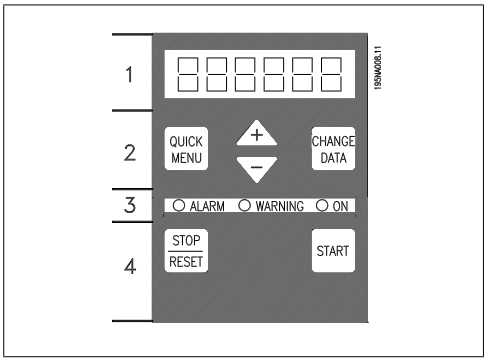

LED indication	
Warning	yellow
Alarm	red
Trip locked	yellow and red

All displays of data are in the form of a six-digit LED display capable of showing one item of operating data continuously during normal operation. As a supplement to the display, there are three LEDs for indication of AC line input connections (ON), warning (WARNING) and alarm (ALARM). Most of the parameter set-ups of the adjustable frequency drive can be changed immediately via the control panel, unless this function has been programmed as *Locked* [1] via parameter 018 *Lock for data changes*.

1.5.2 Control Keys

[QUICK MENU] allows access to the parameters used for the quick menu.
The[QUICK MENU] key is also used if a change to a parameter value is not to be implemented.

See also [QUICK MENU] + [+].

[CHANGE DATA] is used for changing a setting.
If the display shows three dots at the right, the parameter value has more than three digits. In order to see the value, activate [CHANGE DATA]
The [CHANGE DATA] key is also used for confirming a change of parameter settings.

[+] / [-] are used for selecting parameters and for changing parameter values.
These keys are also used in display mode for selecting the display of an operating value.

The **[QUICK MENU] + [+]** keys must be pressed at the same time to give access to all parameters. See *Menu mode.*

[STOP/RESET] is used for stopping the connected motor or for resetting the adjustable frequency drive after a trip.
Can be selected as *Active* [1] or *Not active* [0] via parameter 014 *Local stop/reset*. In display mode, the display will flash if the stop function is activated.

NOTE!
If the [STOP/RESET] key is set at *Not active* [0] in parameter 014 *Local stop/reset,* and there is no stop command via the digital inputs or serial communication, the motor can only be stopped by disconnecting the AC line voltage to the adjustable frequency drive.

[START] is used for starting the adjustable frequency drive. It is always active, but the [START] key cannot override a stop command.

1.5.3 Manual initialization

Disconnect AC line voltage. Hold the [QUICK MENU] + [+] + [CHANGE DATA] keys down while simultaneously reconnecting the AC line voltage. Release the keys; the adjustable frequency drive has now been programmed for the factory setting.

1.5.4 Display Readout States

In normal operation, one item of operating data can be displayed continuously at the operator's own choice. By means of the [+/-] keys, the following options can be selected in Display mode:

- Output frequency [Hz]
- Output current [A]
- Output voltage [V]
- Intermediate circuit voltage [V]
- Output power [kW]
- Scaled output frequency f_{out} x p008

1

1.5.5 Menu mode

In order to enter the Menu mode [QUICK MENU] + [+] must be activated at the same time.
In Menu mode, most of the adjustable frequency drive parameters can be changed. Scroll through the parameters using the [+/-] keys. While scrolling in the Menu mode proceeds, the parameter number will flash.

1.5.6 Quick menu

Using the [QUICK MENU] key, it is possible to access the 12 most important parameters of the adjustable frequency drive. After programming, the adjustable frequency drive is, in most cases, ready for operation. When the [QUICK MENU] key is activated in Display mode, the Quick menu starts. Scroll through the quick menu using the [+/-] keys and change the data values by first pressing [CHANGE DATA] and then changing the parameter value with the [+/-] keys.
The Quick menu parameters are shown in section *Parameter Lists*:

1.5.7 Hand Auto

During normal operation the adjustable frequency drive is in auto mode, where the reference signal is given externally, analog or digital via the control terminals. However, in hand mode, it is possible to give the reference signal locally via the control panel.

On the control terminals, the following control signals will remain active when hand mode is activated:

Hand Start (LCP2)	Quick Stop Inverse	Thermistor
Off Stop (LCP2)	Stop Inverse	Precise Stop Inverse
Auto Start (LCP2)	Reversing	Precise Stop/Start
Reset	DC Braking Inverse	Jog
Coasting Stop Inverse	Set-up Select LSB	Stop Comm. Via Serial Comm.
Reset and Coasting Stop Inverse	Set-up Select MSB	

Switching between auto and hand mode:
By activating the [Change Data] key in [Display Mode], the display will indicate the mode of the adjustable frequency drive.
Scroll up/down in order to switch to hand mode, the reference can be changed by using [+]/[-].

NOTE!
Please note that parameter 020 may block the choice of mode.

A change of parameter values is saved automatically after a line failure.
If the display shows three dots at the right, the parameter value has more than three digits. In order to see the value, activate [CHANGE DATA].

Press [QUICK MENU]:

Set the motor parameters that are on the motor nameplate

Motor power [kW]	Parameter 102
Motor voltage [V]	Parameter 103
Motor frequency [Hz]	Parameter 104
Motor current [A]	Parameter 105
Rated motor speed	Parameter 106

Activate AMT

Automatic motor tuning	Parameter 107

1. In parameter 107 *Automatic motor tuning,* select data value [2]. "107" will now flash, and "2" will not flash.
2. AMT is activated by pressing start. "107" will now flash and dashes will move from left to right in the data value field.
3. When "107" appears once more with the data value [0], AMT is complete. Press [STOP/RESET] to save the motor data.
4. "107" will then continue to flash with the data value [0]. You can now proceed.

NOTE!
VLT 2880-2882 do not have the AMT function.

Set reference range

Min. reference, Ref_{MIN}	Parameter 204
Max. reference, Ref_{MAX}	Parameter 205

Set ramp time

Ramp-up time [s]	Parameter 207
Ramp-down time [s]	Parameter 208

In parameter 002, *Local/remote control*, the adjustable frequency drive mode can be selected as *Remote operation* [0], e.g., via the control terminals, or *Local* [1], e.g., via the control unit.

Set the control location to *Local* [1]

Local/remote operation = *Local* [1], Par. 002

Set the motor speed by adjusting the *Local reference*

Local reference, Par. 003

1

1.6 Motor Start

Press [START] to start the motor. Set the motor speed by adjusting par. 003, *Local reference*.

Check whether the direction of rotation of the motor shaft is clockwise. If not, exchange any two phases on the motor cable.
Press [STOP/RESET] to stop the motor.
Press [QUICK MENU] to return to display mode.
[QUICK MENU] + [+] keys must be pressed simultaneously to give access to all parameters.

1.7 Connection Examples

More examples can be found in the Instruction Manual (MG.27.Ax.yy).

1.7.1 Start/stop

Start/stop using terminal 18 and coasting stop using terminal 27.

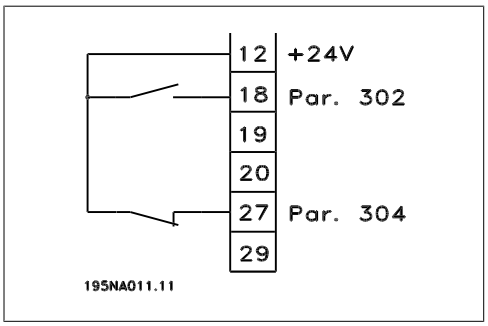

Par. 302 *Digital input* = *Start* [7]

Par. 304 *Digital input* = *Coasting stop inverted* [2]

For Precise start/stop the following settings are made:

Par. 302 *Digital input* = *Precise start/stop* [27]

Par. 304 *Digital input* = *Coasting stop inverted* [2]

1.8 Parameter List

All parameters are listed in the following. For information on conversion index, data type and further descriptions, please see Instruction Manual (MG.27.AX.YY) or Design Guide (MG. 27.EX.YY).

For external communication, please see dedicated literature (see section *Available Literature*).

NOTE!
Use MCT-10 and USB to RS485 drive to change parameters.

Parameter Overview

0-XX Operation/Display
0-01 Language
*[0] English
[1] German
[2] French
[3] Danish
[4] Spanish
[5] Italian **002 Local/Remote Operation**
*[0] Remote operation
[1] Local operation
003 Local Reference
If par. 013 = [1] or [2]: 0–f_{MAX}, *50 Hz
If par. 013 = [3] or [4]: Ref_{MIN} - Ref_{MAX}, *0.0
004 Active Set-up
[0] Factory Set-up
*[1] Set-up 1
[2] Set-up 2
[3] Set-up 3
[4] Set-up 4
[5] Multi Set-up
005 Programming Set-up
[0] Factory Set-up
*[1] Set-up 1
[2] Set-up 2
[3] Set-up 3
[4] Set-up 4
*[5] Active Set-up
0-06 Set-up Copying
*[0] No copying
[1] Copy to Set-up 1 from #
[2] Copy to Set-up 2 from #
[3] Copy to Set-up 3 from #
[4] Copy to Set-up 4 from #
[5] Copy to all set-ups from #
007 LCP Copy
*[0] No copying
[1] Upload all parameters
[2] Download all parameters
[3] Download size-independent parameters

008 Display Scaling of Output Frequency
0.01–100.00, *1.00
009 Large Display Readout
[0] No readout
[1] Resulting reference [%]
[2] Resulting reference [unit]
[3] Feedback [unit]
*[4] Frequency [Hz]
[5] Output frequency x scaling
[6] Motor current [A]
[7] Torque [%]
[8] Power [kW]
[9] Power [HP]
[11] Motor voltage [V]
[12] DC link voltage [V]
[13] Thermal load motor [%]
[14] Thermal load [%]
[15] Running hours [Hours]
[16] Digital input [Bin]
[17] Analog input 53 [V]
[19] Analog input 60 [mA]
[20] Pulse reference [Hz]
[21] External reference [%]
[22] Status word [Hex]
[25] Heatsink temperature [°C]
[26] Alarm word [Hex]
[27] Control word [Hex]
[28] Warning word [Hex]
[29] Extended status word [Hex]
[30] Communication option card warning
[31] Pulse count
010 Small Display Line 1.1
See par. 009.
*[17] Analog input 53
011 Small Display Readout 1.2
See par. 009.
*[6] Motor Current [A]
012 Small Display Readout 1.3
*See par. 009.
*[3] Feedback [unit]

013 Local Control
[0] Local not active
[1] Local control and open-loop without slip compensation
[2] Remote-operated control and open-loop without slip compensation
[3] Local control as par. 100
*[4] Remote-operated control as par. 100**014 Local stop**
[0] Not active
*[1] Active
015 Local Jog
*[0] Not active
[1] Active
016 Local Reversing
*[0] Not active
[1] Active
017 Local reset of Trip
[0] Not active
*[1] Active
018 Lock for Data Changes
*[0] Not locked
[1] Locked
019 Operating Mode at Power-up, Local Operation
[0] Auto re-start, use saved reference
*[1] Forced stop, use saved reference
[2] Forced stop, set ref. to 0
020 Hand Operation
*[0] Not active
[1] Active
024 User-defined Quick Menu
*[0] Not active
[1] Active
025 Quick Menu Set-up
Value 0–999, *000
Load and Motor
100 Configuration
*[0] Speed control, open-loop
[2] Speed control, closed-loop
[3] Process control, closed-loop
101 Torque Characteristic
*[1] Constant torque
[2] Variable torque low
[3] Variable torque medium
[4] Variable torque high
[5] Variable torque low with CT start
[6] Variable torque medium with CT start
[7] Variable torque high with CT start
[8] Special motor mode
102 Motor Power $P_{M,N}$
0.34–30 hp [0.25–22 kW], *Dep. on unit
103 Motor Voltage $U_{M,N}$
For 200 V units: 50–999 V, *230 V
For 400 V units: 50–999 V, *400 V
104 Motor Frequency $f_{M,N}$
24–1000 Hz, *50 Hz
105 Motor Current $I_{M,N}$
0.01–I_{MAX}, Dep. on motor
106 Rated Motor Speed
100 - $f_{M,N}$ x 60 (max. 60000 rpm), Dep. on par. 104
107 Automatic Motor Tuning, AMT
*[0] Optimization off
[1] Optimization on
108 Stator Resistance R_S
0.000–x.xxx Ω, *Dep. on motor
109 Stator Resistance X_S
0.00–x.xx Ω, *Dep. on motor
117 Resonance Damping
OFF - 100%
*OFF%
119 High Start Torque
0.0–0.5 s * 0.0 s
120 Start Delay
0.0–10.0 s * 0.0 s
121 Start Function
[0] DC hold during start delay time
[1] DC brake during start delay time
*[2] Coasting during start delay time

MG.28.M1.22 - VLT® is a registered Danfoss trademark

[3] Start frequency/voltage clockwise
[4] Start frequency/voltage in reference direction

122 Function at Stop
*[0] Coasting
[1] DC hold

123 Min. Frequency for Activation of Function at Stop
0.1–10 Hz, *0.1 Hz

126 DC Brake Time
0–60 s, *10 s

127 DC brake cut-in frequency
0.0 (OFF) - Par. 202, *OFF

128 Thermal Motor Protection
*[0] No protection
[1] Thermistor warning
[2] Thermistor trip
[3] ETR warning 1
[4] ETR trip 1
[5] ETR warning 2
[6] ETR trip 2
[7] ETR warning 3
[8] ETR trip 3
[9] ETR warning 4
[10] ETR trip 4

130 Start Frequency
0.0–10.0 Hz, *0.0 Hz

131 Initial Voltage
0.0–200.0 V, *0.0 V

132 DC Brake Voltage
0–100% of max. DC brake voltage, *0%

133 Start Voltage
0.00–100.00 V, *Dep. on unit

134 Load Compensation
0.0–300.0%, 100.0%

135 U/f Ratio
0.00–20.00 at Hz, *Dep. on unit

136 Slip Compensation
0–150% * 100% -500 . +500% of rated slip compensation, *100%

137 DC Hold Voltage
0–100% if nax. DC hold voltage, *0%

138 Brake Cut-out Value
0.5–132.0/1000.0 Hz, *3.0 Hz

139 Brake Cut-in Frequency
0.5–132.0/1000.0 Hz, *3.0 Hz

140 Current, Minimum Value
0%–100% of inverter output current

142 Leakage Reactance X_L
0.000–xxx.xxx Ω, *Dep- on motor

143 Internal Fan Control
*[0] Automatic
[1] Always switched on
[2] Always switched off

144 Gain AC Brake
1.00–1.50, *1.30

146 Reset Voltage Vector
*[0] Off
[1] Reset

***References and Limits* 200 Output Frequency Range**
*[0] Only clockwise, 0–132 Hz
[1] Both directions, 0–132 Hz
[2] Counterclockwise only, 0–132 Hz
[4] Both directions, 0–1000 Hz
[5] Counter-clockwise only, 0–1000 Hz

201 Output Frequency Low Limit, f_{MIN}
0.0 - f_{MAX}, *0.0 Hz

202 Output Frequency High Limit, F_{MAX}
f_{MIN} - 132/1000 Hz (par. 200 *Output frequency range*, 132 Hz

203 Reference Range
[0] Min. reference - Max. reference
[1] Analog Input 53 -Max. reference - +Max. reference

204 Minimum Reference, Ref_{MIN}
Par. 100 [0]. -100,000.000 - par. 205 Ref_{MAX}, *0.000 Hz
Par. 100 [1]/[3], -par. 414 *Minimum feedback* - par. 205 Ref_{MAX}, *0.000 rpm/par. 416

205 maximum Reference, Ref_{MAX}
Par. 100 [0]. Par. 204 Ref_{MIN} - *1000.000 Hz*, *50.000 Hz
Par. 100 [1]/[3]. Par. 204 Ref_{MIN}- Par. 415 *Max Feedback*, *50.000 rpm/par. 416

206 Ramp Type
*[0] Linear
[1] Sinus shaped
[2] Sin^2

207 Ramp-up Time 1
0.02–3600.00 s, * 3.00 s (VLT 2803 - 2875), * 10.00 (2880 - 2882)

208 Ramp-down Time 1
0.02–3600.00 s, * 3.00 s (VLT 2803 - 2875), * 10.00 (2880 - 2882)

209 Ramp-up Time 2
0.02–3600.00 s, * 3.00 s (VLT 2803 - 2875), * 10.00 (2880 - 2882)

210 Ramp-down Time 2
0.02–3600.00 s, * 3.00 s (VLT 2803 - 2875), * 10.00 (2880 - 2882)

211 Jog Ramp Time
0.02–3600.00 s, * 3.00 s (VLT 2803 - 2875), * 10.00 (2880 - 2882)

212 Quick-stop Ramp-down Time
0.02–3600.00 s, * 3.00 s (VLT 2803 - 2875), * 10.00 (2880 - 2882)

213 Jog Frequency
0.0 - Par. 202 *Output Frequency High Limit,* f_{MAX}

214 Reference Function
*[0] Sum
[1] Relative
[2] External/preset

215-218 Preset reference 1-4
0.0–400.0 Hz * 0.0 Hz-100.00% - +100.00%, * 0.00%

219 Catch Up/Slow-down Reference
0.00–100% of the given reference, * 0.00%

221 Current Limit, I_{LIM}
0–xxx.x% of par. 105, * 160%

223 Warning, Low Current, I_{LOW}
0.0 - par. 224 *Warning: High Current,* I_{HIGH}, *0.0 A*

224 Warning: High Current, I_{HIGH}
0 - I_{MAX}, * I_{MAX}

225 Warning: Low Frequency, f_{LOW}
0.0 - par. 226 *Warn.: High frequency,* f_{HIGH}, *0.0 Hz

226 Warning: High Frequency f_{HIGH}
If par. 200 = [0]/[1]. Par. 225 f_{LOW} - 132 Hz, * 132.0 Hz
If par. 200 [2]/[3]. Par 225 f_{LOW} - 1000 Hz, * 132.0 Hz

227 Warning: Low Feedback, FB_{LOW}
0.0–400.0 Hz * 0.0 Hz-100,000.000 - par. 228 *Warn.:* FB_{HIGH}, * -4000.000

228 Warning: High Feedback, FB_{HIGH}
Par. 227 *Warn.:* FB_{LOW} - 100,000.000, * 4000.000

229 Frequency Bypass, Bandwidth
0 (OFF) - 100 Hz, * 0 Hz

230 - 231 Frequency Bypass 1 - 2
0–100 Hz, *0.0 Hz ***Inputs and Outputs* 302 Terminal 18 Digital Input**
[0] No function
[1] Reset
[2] Coasting stop inverse
[3] Reset and coasting inverse
[4] Quick-stop inverse
[5] DC braking inverse
[6] Stop inverse
*[7] Start
[8] Pulse start
[9] Reversing
[10] Reversing
[11] Start Clockwise
[12] Start counter-clockwise
[13] Jog
[14] Freeze reference
[15] Freeze output frequency
[16] Speed up
[17] Slow
[19] Catch up
[20] Slow-down
[21] Ramp 2
[22] Preset ref, LSB
[23] Preset ref, MSB
[24] Preset reference on
[25] Thermistor
[26] Precise stop
[27] Precise Start Stop
[31] Selection of Set-up, LSB
[32] Selection of Set-up, MSB
[33] Reset and start
[34 Pulse counter start

303 Terminal 19 Digital Input
See par. 302 * [9] Reversing
304 Terminal 27 Digital Input
[0] No function
[1] Reset
[2] Coasting stop inverse
*[3] Reset and coasting inverse
[4] Quick-stop inverse
[5] DC braking inverse
[6] Stop inverse
[7] Start
[8] Pulse start
[9] Reversing
[10] Reversing
[11] Start Clockwise
[12] Start counter-clockwise
[13] Jog
[14] Freeze reference
[15] Freeze output frequency
[16] Speed up
[17] Slow
[19] Catch up
[20] Slow-down
[21] Ramp 2
[22] Preset ref, LSB
[23] Preset ref, MSB
[24] Preset reference on
[25] Thermistor
[26] Precise stop
[27] Precise Start Stop
[31] Selection of Set-up, LSB
[32] Selection of Set-up, MSB
[33] Reset and start
[34 Pulse counter start
305 Terminal 29 Digital Input
See par. 305 * [13] Jog
307 Terminal 33 Digital Input
*[0] No function
[1] Reset
[2] Coasting stop inverse
[3] Reset and coasting inverse
[4] Quick-stop inverse
[5] DC braking inverse
[6] Stop inverse
[7] Start
[8] Pulse start
[9] Reversing
[10] Reversing
[11] Start Clockwise
[12] Start counter-clockwise
[13] Jog
[14] Freeze reference
[15] Freeze output frequency
[16] Speed up
[17] Slow
[19] Catch up
[20] Slow-down
[21] Ramp 2
[22] Preset ref, LSB
[23] Preset ref, MSB
[24] Preset reference on
[28] Pulse reference
[29] Pulse feedback
[30] Pulse input
[31] Selection of Set-up, LSB
[32] Selection of Set-up, MSB
[33] Reset and start
308 Terminal 53, Analog Input Voltage
[0] No function
*[1] Reference
[2] Feedback
[3] Wobble **309 Terminal 53 Min. Scaling**
0.0–10.0 V, * 0.0 V
310 Terminal 53 Max. Scaling
0.0–10.0 V, * 10.0 V
314 Terminal 60 Analog Input Current
[0] No function
[1] Reference
*[2] Feedback
[10] Wobble
315 Terminal 60 Min. Scaling
0.0–20.0 mA, * 4.0 mA
316 Terminal 60 Max. Scaling
0.0–20.0 mA, * 20.0 mA
317 Timeout
1–99 s * 10 s
318
*[0] No operation
[1] Freeze output frequency
[2] Stop
[3] Jog
[4] Max speed
[5] Stop and trip
319 Analog output terminal 42
[0] No function
[1] External reference min. - max. 0–20 mA
[2] External reference min. - max. 4–20 mA
[3] Feedback min. - max. 0–20 mA
[4] Feedback min–max 4–20 mA
[5] Output frequency 0–max 0–20 mA
[6] Output frequency 0–max 4–20 mA
*[7] Output current 0–I_{INV} 0–20 mA
[8] Output current 0–I_{INV} 4–20 mA
[9] Output power 0-$P_{M,N}$ 0–20 mA
[10] Output power 0–$P_{M,N}$ 4–20 mA
[11] Inverter temperature 20°–100°C 0–20 mA
[12] Inverter temperature 20°–100°C 4–20 mA
323 Relay Output 1-3
[0] No function
*[1] Unit ready
[2] Enable/no warning
[3] Running
[4] Running in reference, no warning
[5] Running, no warning
[6] Running in reference range, no warnings
[7] Ready - mains voltage within range
[8] Alarm or warning
[9] Current higher than current limit
[10] Alarm
[11] Output frequency higher than f_{LOW}
[12] Output frequency lower than f_{HIGH}
[13] Output current higher than I_{LOW}
[14] Output current lower than I_{HIGH} par. 224
[15] Feedback higher than FB_{LOW}
[16] Feedback lower than FB_{HIGH} par. 228
[17] Relay 123
[18] Reversing
[19] Thermal warning
[20] Local operation
[22] Out of frequency range par. 225/226
[23] Out of current range
[24] Out of feedback range
[24] Mechanical brake control
[25] Control word bit 11
327 Pulse reference/feedback
150–67600 Hz, * 5000 Hz
328 Maximum Pulse 29
150–67600 Hz, * 5000 Hz
341 Digital/Pulse Output Terminal 46
[0] Unit ready
Par. [0] - [20], see par. 323
[21] Pulse reference
Par. [22] - [25], see par. 323
[26] Pulse feedback
[27] Output frequency
[28] Pulse current
[29] Pulse power
[30] Pulse temperature
342 Terminal 46, max. Pulse Scaling
150–10000 Hz, * 5000 Hz
343 Precise Stop Function
*[0] Precise ramp stop
[1] Counter stop with reset
[2] Counter stop without reset
[3] Speed-compensated counter stop
[4] Speed-compensated stop with reset
[5] Speed-compensated stop without reset
344 Counter Value
0–999999, * 100000 pulses
349 Speed Comp Delay
0–100 ms, * 10 ms
Special Functions
400 Brake Function
[0] OFF
[1] Resistor brake
[4] AC brake
[5] Load sharing

MG.28.M1.22 - VLT® is a registered Danfoss trademark

405 Reset Function
*[0] Manual reset
[1] Automatic reset x 1
[3] Automatic reset x 3
[10] Automatic reset x 10
[11] Reset at power-up
406 Automatic Restart Time
0–10 s, * 5 s
409 Trip Delay Overcurrent, I_{LIM}
0–60 s (61 = OFF), * OFF
411 Switching Frequency
3000–14000 Hz (VLT 2803 - 2875), * 4500 Hz
3000–10000 Hz (VLT 2880 - 2882), * 4500 Hz
412 Variable Switching Frequency
*[2] Without LC filter
[3] LC filter connected
413 Overmodulation Function
[0] OFF
*[1] ON
414 Minimum Feedback, FB_{MIN}
-100,000.000 - par. 415, *FB_{MAX}*, * 0.000
415 Maximum Feedback, FB_{MAX}
FB_{MIN} - 100,000.000, * 1500.000
416 Process Units
*[0] No unit
[1] %
[2] ppm
[3] rpm
[4] bar
[5] Cycles/min
[6] Pulses/s
[7] Units/s
[8] Units/min
[9] Units/h
[10] °C
[11] Pa
[12] I/s
[13] m^3/s
[14] l/min
[15] m^3/min
[16] l/h
[17] m^3/h
[18] kg/s
[19] kg/min
[20] kg/h
[21] t/min
[22] t/h
[23] Meters
[24] Nm
[25] m/s
[26] m/min
[27] ° F
[28] in wg
[29] gal/s
[30] Ft^3/s
[31] gal/min[32] Ft^3/min
[33] gal/h
[34] Ft^3/h
[35] lb/s
[36] lb/min
[37] lb/h
[38] lb ft
[39] Ft/s
[40] Ft/min
417 Speed PID Proportional Gain
0.000 (OFF)–1.000, * 0.010
418 Speed PID Integral Time
20.00–999.99 ms (1000 - OFF), * 100 ms
419 Speed PID Differential Time
0.00 (OFF)–200.00 ms, * 20.00 ms
420 Speed PID D-Gain Limit
5.0–50.0, * 5.0
421 Speed PID Lowpass Filter Time
20–500 ms, * 100 ms
423 U1 Voltage 0.0–999.0 V, * par. 103
424 F1 Frequency
0.0 - par. 426, *F2 frequency*, * Par. 104
425 U2 Voltage
0.0–999.0 V, * par. 103
426 F2 Frequency
Par. 424, *F1 frequency* - Par. 428, *F3 frequency*, * par. 104
427 U3 Voltage
0.0–999.0 V, * par. 103
428 F3 Frequency
Par. 426, *F2 frequency* - 1000 Hz, * par. 104
437 Process PID Normal/Inverse Control
*[0] Normal
[1] Inverse
438 Process PID Anti Windup
[0] Not active
[1] Active
Process PID Start Frequency
f_{MIN} - f_{MAX} (par. 201 - par. 202), * par. 201
440 Process PID Proportional Gain
0.0–10.00, * 0.01
441 Process PID Integration Time
0.00 (OFF)–10.00 s, * OFF
442 Process PID Differentiation Time
0.00 (OFF)–10.00 s, * 0.00 s
443 Process PID Diff. Gain Limit
5.0–50.0, * 5.0
444 Process PID Lowpass Filter Time
0.02–10.00, * 0.02
445 Flying Start
*[0] OFF
[1] OK - same direction
[2] OK - both directions
[2] DC brake and start
451 Speed PID Feed-forward Factor
0–500%, * 100%
452 Controller Range
0–200%, * 10%
456 Brake Voltage Reduce
0–25 V if 200 V, * 0
0–50 V if 400 V, * 0
461 Feedback Conversion
*[0] Linear
[1] Square root
462 Enhanced Sleep Mode Timer
Value 0–9999 s, * 0 = OFF
463 Boost Setpoint
1–200%, * 100% of setpoint
464 Wake-up Pressure
Par. 204, *Ref_{MIN}* - par. 215-218 setpoint, * 0
465 Minimum Pump Frequency
Value par. 201, *f_{MIN}* - par. 202 f_{MAX} (Hz), * 20
466 Maximum Pump Frequency
Value par. 201, *f_{MIN}* - par. 202 f_{MAX} (Hz), * 50
467 Minimum Pump Power
0–500.000 W, * 0
468 Maximum Pump Power
0–500.000 W, * 0
469 No Flow Power Compensation
0.01–2, * 1.2
470 Dry Run Time Out
5–30 s, * 31 = OFF
471 Dry Run Interlock Timer
0.5–60 min., * 30 min.
484 Initial Ramp
OFF/000.1–360.0 s, * OFF
485 Fill Rate
OFF/000000.001–999999.999 (units/s), * OFF
486 Filled Setpoint
Par. 414 - par. 205, * par. 414

1.9.1 Warnings/alarm messages

No.	Description	WA	T	Cause of Problem
2	Live zero error (LIVE ZERO ERROR)	X X	X	Voltage or current signal on terminals 53 or 60 is below 50% of preset value.
4	Mains phase loss (MAINS PHASE LOSS)	X X	X	No phase on the line power supply side.
5	Voltage warning high (DC LINK VOLTAGE HIGH)	X		The intermediate circuit voltage exceeds the limit set.
6	Voltage warning low (DC LINK VOLTAGE LOW)	X		The intermediate circuit voltage is lower the limit set.
7	Overvoltage (DC LINK OVERVOLT)	X X	X	The intermediate voltage exceeds the limit set.
8	Undervoltage (DC LINK UNDERVOLT)	X X	X	The intermediate voltage is lower than the limit set.
9	Inverter overload (INVERTER TIME)	X X		The adjustable frequency drive is close to tripping due to overload.
10	Motor overloaded (MOTOR, TIME)	X X		The motor is too hot due to overload.
11	Motor thermistor (MOTOR THERMISTOR)	X X		Either the motor is too hot or the thermistor has been disconnected.
12	Current limit (CURRENT LIMIT)	X X		Output current is higher than set in par. 221.
13	Overcurrent (OVERCURRENT)	X X	X	The peak current limit has been exceeded.
14	Ground fault (GROUND FAULT)	X	X	Discharge from output phases to ground.
15	Switch mode fault (SWITCH MODE FAULT)	X	X	Fault in switch mode power supply.
16	Short-circuit (CURR. SHORT CIRCUIT)	X	X	Short-circuit on the motor terminals or in the motor.
17	Serial communication timeout (STD BUS TIMEOUT)	X X		No serial communication to the adjustable frequency drive.
18	HPFB bus timeout (HPFB TIMEOUT)	X X		No serial communication to the communication option card.
33	Out of frequency range (OUT FREQ RNG/ROT LIM)	X		Output frequency has reached the limit set in either par. 201 or par. 202.
34	HPFB communication fault (PROFIBUS OPT. FAULT)	X X		Fault only occurs in serial communication bus versions. Please see par. 953 in serial communication bus literature.
35	Inrush fault (INRUSH FAULT)	X	X	Connected to line power too many times within 1 minute.
36	Overtemperature (OVERTEMPERATURE)	X X		The upper temperature limit has been exceeded.
37-45	Internal fault (INTERNAL FAULT)	X	X	Please contact Danfoss.

W: Warning, **A:** Alarm, **T:** Trip locked

1

No.	Description	WA	T	Cause of Problem
50	AMT not possible	X		Either R_S value is outside permitted limits, or motor current is too low on at least one phase, or the motor is too small for AMA.
51	AMT fault re. nameplate data (AMT TYPE.DATA FAULT)	X		Inconsistency between registered motor data.
54	AMT wrong motor (AMT WRONG MOTOR)	X		AMA has detected a missing motor phase.
55	AMT timeout (AMT TIME-OUT)	X		Calculations are taking too long, probably caused by noise on motor cables.
56	AMT warning during AMT (AMT WARN. DURING AMT)	X		Warning is given while AMA is performed.
99	Locked (LOCKED)		X	See par. 018.

W: Warning, **A:** Alarm, **T:** Trip locked
A warning or an alarm will appear in the display as a numerical code **Err. xx**. A warning will be shown on the display until the fault has been corrected, while an alarm will continue to flash until the [STOP/RESET] key is activated.The table shows the various warnings and alarms, and whether the fault locks the adjustable frequency drive. After a *Trip locked,* the line power supply is cut off and the fault is corrected. The line power supply is reconnected and the adjustable frequency drive is reset. The adjustable frequency drive is now ready. A *Trip* can be reset manually in three ways:

1. Via the operating key [STOP/RESET].
2. Via a digital input.
3. Via serial communication.

It is also possible to choose an automatic reset in parameter 405 *Reset function*. When a cross appears in both warning and alarm, this can mean that a warning comes before an alarm. It can also mean that it is possible for the user to program whether a warning or an alarm will appear for a given fault. For example, this is possible in parameter 128 *Motor thermal protection*. After a trip, the motor will coast, and alarm and warning will blink on the adjustable frequency drive; but if the fault disappears, only the alarm will blink. After a reset, the adjustable frequency drive will be ready to start operation again.

1.10 Specifications

1.10.1 Line Power Supply 200–400 V

According to international standards		Type	2803	2805	2807	2811	2815	2822	2822 PD2	2840	2840 PD2
	Output current	$I_{INV.}$ [A]	2.2	3.2	4.2	6.0	6.8	9.6	9.6	16	16
	(3 x 200–240 V)	I_{MAX} (60s) [A]	3.5	5.1	6.7	9.6	10.8	15.3	10.6	25.6	17.6
	Output power (230 V)	$S_{INV.}$ [KVA]	0.9	1.3	1.7	2.4	2.7	3.8	3.8	6.4	6.4
	Typical shaft output	$P_{M,N}$ [kW]	0.37	0.55	0.75	1.1	1.5	2.2	2.2	3.7	3.7
	Typical shaft output	$P_{M,N}$ [HP]	0.5	0.75	1.0	1.5	2.0	3.0	3.0	5.0	5.0
	Max. cable cross-section, motor	[mm²/AWG]	4/10	4/10	4/10	4/10	4/10	4/10	4/10	4/10	16/6
	Input current	$I_{L,N}$ [A]	5.9	8.3	10.6	14.5	15.2	-	22.0	-	31.0
	(1 x 220–240 V)	$I_{L,MAX}$ (60s) [A]	9.4	13.3	16.7	23.2	24.3	-	24.3	-	34.5
	Input current	$I_{L,N}$ [A]	2.9	4.0	5.1	7.0	7.6	8.8	8.8	14.7	14.7
	(3 x 200–240 V)	$I_{L,MAX}$ (60s) [A]	4.6	6.4	8.2	11.2	12.2	14.1	9.7	23.5	16.2
	Max. cable cross-section, power	[mm²/AWG]	4/10	4/10	4/10	4/10	4/10	4/10	4/10	4/10	16/6
	Max. pre-fuses	IEC/UL [A]	20/20	20/20	20/20	20/20	20/20	20/20	35/35	25/25	50/50
	Efficiency	[%]	95	95	95	95	95	95	95	95	95
	Power loss at 100% load	[W]	24	35	48	69	94	125	125	231	231
	Weight	[kg]	2.0	2.0	2.0	2.0	2.0	3.7	6.0	6.0	18.50
	Enclosure	type	IP 20	IP 20	IP 20	IP 20	IP 20	IP 20	IP 20	IP 20	IP 20/ NEMA 1

1

1.10.2 Line Power Supply 380–480 V

According to international standards		Type	2805	2807	2811	2815	2822	2830
	Output current	$I_{INV.}$ [A]	1.7	2.1	3.0	3.7	5.2	7.0
	(3 x 380–480 V)	I_{MAX} (60s) [A]	2.7	3.3	4.8	5.9	8.3	11.2
	Output power (400 V)	$S_{INV.}$ [KVA]	1.1	1.7	2.0	2.6	3.6	4.8
	Typical shaft output	$P_{M,N}$ [kW]	0.55	0.75	1.1	1.5	2.2	3.0
	Typical shaft output	$P_{M,N}$ [HP]	0.75	1.0	1.5	2.0	3.0	4.0
	Max. cable cross-section, motor	[mm²/AWG]	4/10	4/10	4/10	4/10	4/10	4/10
	Input current	$I_{L,N}$ [A]	1.6	1.9	2.6	3.2	4.7	6.1
	(3 x 380–480 V)	$I_{L,MAX}$(60s)[A]	2.6	3.0	4.2	5.1	7.5	9.8
	Max. cable cross-section, power	[mm²/AWG]	4/10	4/10	4/10	4/10	4/10	4/10
	Max. pre-fuses	IEC/UL [A]	20/20	20/20	20/20	20/20	20/20	20/20
	Efficiency	[%]	96	96	96	96	96	96
	Power loss at 100% load	[W]	28	38	55	75	110	150
	Weight	[kg]	2.1	2.1	2.1	2.1	3.7	3.7
	Enclosure	type	IP 20	IP 20	IP 20	IP 20	IP 20	IP 20

According to international standards		Type	2840	2855	2875	2880	2881	2882
	Output current	$I_{INV.}$ [A]	9.1	12	16	24	32.0	37.5
	(3 x 380–480 V)	I_{MAX} (60s) [A]	14.5	19.2	25.6	38.4	51.2	60.0
	Output power (400 V)	$S_{INV.}$ [KVA]	6.3	8.3	11.1	16.6	22.2	26.0
	Typical shaft output	$P_{M,N}$ [kW]	4.0	5.5	7.5	11.0	15.0	18.5
	Typical shaft output	$P_{M,N}$ [HP]	5.0	7.5	10.0	15.0	20.0	25.0
	Max. cable cross-section, motor	[mm²/AWG]	4/10	4/10	4/10	16/6	16/6	16/6
	Input current	$I_{L,N}$ [A]	8.1	10.6	14.9	24.0	32.0	37.5
	(3 x 380–480 V)	$I_{L,MAX}$(60s)[A]	13.0	17.0	23.8	38.4	51.2	60
	Max. cable cross-section, power	[mm²/AWG]	4/10	4/10	4/10	16/6	16/6	16/6
	Max. pre-fuses	IEC/UL [A]	20/20	25/25	25/25	50/50	50/50	50/50
	Efficiency	[%]	96	96	96	97	97	97
	Power loss at 100% load	[W]	200	275	372	412	562	693
	Weight	[kg]	3.7	6.0	6.0	18.5	18.5	18.5
	Enclosure	type	IP20	IP20	IP20	IP20/ NEMA 1	IP20/ NEMA 1	IP20/ NEMA 1

1.11 General Specifications

Line power supply (L1, L2, L3):	
Supply voltage VLT 2803-2840 220-240 V (N, L1)	1 x 220/230/240 V ±10%
Supply voltage VLT 2803-2840 200-240 V	3 x 200/208/220/230/240 V ±10%
Supply voltage VLT 2805-2882 380-480 V	3 x 380/400/415/440/480 V ±10%
Supply voltage VLT 2805-2840 (R5)	380/400 V + 10%
Supply frequency	50/60 Hz ± 3 Hz

Max. imbalance on supply voltage	± 2.0% of rated supply voltage
True Power Factor (λ)	0.90 nominal at rated load
Displacement Power Factor (cos φ)	near unity (> 0.98)
Number of connections at supply input L1, L2, L3	2 times/min.
Max. short circuit value	100,000 A

See Special Conditions section in the Design Guide

Output data (U, V, W):	
Output voltage	0 - 100% of supply voltage
Output frequency	0.2 - 132 Hz, 1 - 1000 Hz
Rated motor voltage, 200-240 V units	200/208/220/230/240 V
Rated motor voltage, 380-480 V units	380/400/415/440/460/480 V
Rated motor frequency	50/60 Hz
Switching on output	Unlimited
Ramp times	0.02 - 3600 sec.

Torque characteristics:	
Starting torque (parameter 101 Torque characteristic = Constant torque)	160% in 1 min.*
Starting torque (parameter 101 Torque characteristics = Variable torque)	160% in 1 min.*
Starting torque (parameter 119 *High starting torque*)	180% for 0.5 sec.
Overload torque (parameter 101 Torque characteristic = Constant torque)	160%*
Overload torque (parameter 101 Torque characteristic = Variable torque)	160%*

Percentage relates to adjustable frequency drive's nominal current.
** VLT 2822 PD2 / 2840 PD2 1 x 220 V only 110% in 1 min.*

Control card, digital inputs:	
Number of programmable digital inputs	5
Terminal number	18, 19, 27, 29, 33
Voltage level	0–24 V DC (PNP positive logic)
Voltage level, logic '0'	< 5 V DC
Voltage level, logic '1'	> 10 V DC
Maximum voltage on input	28 V DC
Input resistance, R_i (terminals 18, 19, 27, 29)	approx. 4 kΩ
Input resistance, R_i (terminal 33)	approx. 2 kΩ

All digital inputs are galvanically isolated from the supply voltage (PELV) and other high-voltage terminals. See section entitled Galvanic Isolation in the Instruction Manual.

Control card, analog inputs:	
Number of analog voltage inputs	1 pcs.
Terminal number	53
Voltage level	0–10 V DC (scaleable)
Input resistance, R_i	approx. 10 kΩ
Max. voltage	20 V
Number of analog current inputs	1 pcs.
Terminal number	60
Current level	0/4–20 mA (scaleable)
Input resistance, R_i	approx. 300 Ω
Max. current	30 mA
Resolution for analog inputs	10 bit
Accuracy of analog inputs	Max. error 1% of full scale

Scan interval	13.3 msec

The analog inputs are galvanically isolated from the supply voltage (PELV) and other high-voltage terminals. See section entitled Galvanic Isolation in the Instruction Manual.

Control card, pulse inputs:	
Number of programmable pulse inputs	1
Terminal number	33
Max. frequency at terminal 33	67.6 kHz (Push-pull)
Max. frequency at terminal 33	5 kHz (open collector)
Min. frequency at terminal 33	4 Hz
Voltage level	0–24 V DC (PNP positive logic)
Voltage level, logic '0'	< 5 V DC
Voltage level, logic '1'	> 10 V DC
Maximum voltage on input	28 V DC
Input resistance, R_i	approximately 2 kΩ
Scan interval	13.3 msec
Resolution	10 bit
Accuracy (100–1 kHz) terminal 33	Max. error: 0.5% of full scale
Accuracy (1–67.6 kHz) terminal 33	Max. error: 0.1% of full scale

The pulse input (terminal 33) is galvanically isolated from the supply voltage (PELV) and other high-voltage terminals. See section entitled Galvanic Isolation in the Instruction Manual.

Control card, digital/frequency outputs:	
Number of programmable digital/pulse outputs	1 pcs.
Terminal number	46
Voltage level at digital/frequency output	0–24 V DC (O.C PNP)
Max. output current at digital/frequency output	25 mA.
Max. load at digital/frequency output	1 kΩ
Max. capacity at frequency output	10 nF
Minimum output frequency at frequency output	16 Hz
Maximum output frequency at frequency output	10 kHz
Accuracy on frequency output	Max. error: 0.2% of full scale
Resolution on frequency output	10 bit

The digital output is galvanically isolated from the supply voltage (PELV) and other high-voltage terminals. See section entitled Galvanic Isolation in the Instruction Manual.

Control card, analog output:	
Number of programmable analog outputs	1
Terminal number	42
Current range at analog output	0/4–20 mA
Max. load to common at analog output	500 Ω
Accuracy on analog output	Max. error: 1.5% of full scale
Resolution on analog output	10 bit

The analog output is galvanically isolated from the supply voltage (PELV) and other high-voltage terminals. See section entitled Galvanic Isolation in the Instruction Manual.

Control card, 24 V DC output:	
Terminal number	12
Max. load	130 mA

The 24 V DC supply is galvanically isolated from the supply voltage (PELV), but has the same potential as the analog and digital inputs and outputs. See section entitled Galvanic Isolation in the Instruction Manual.

Control card, 10 V DC output:	
Terminal number	50
Output voltage	10.5 V ±0.5 V
Max. load	15 mA

The 10 V DC supply is galvanically isolated from the supply voltage (PELV) and other high-voltage terminals. See section entitled Galvanic Isolation in the Instruction Manual.

Control card, RS-485 serial communication:	
Terminal number	68 (TX+, RX+), 69 (TX-, RX-)
Terminal number 67	+5 V
Terminal number 70	Common for terminals 67, 68 and 69

Full galvanic isolation. See section entitled Galvanic Isolation in the Instruction Manual.
For CANopen/DeviceNet units, see VLT 2800 DeviceNet manual, MG.90.BX.YY.

Relay outputs:[1)]	
Number of programmable relay outputs	1
Terminal number, control card (resistive and inductive load)	1-3 (break), 1-2 (make)
Max. terminal load (AC1) on 1-3, 1-2, control card	250 V AC, 2 A, 500 VA
Max. terminal load (DC1 (IEC 947)) on 1-3, 1-2, control card	25 V DC, 2 A /50 V DC, 1A, 50W
Min. terminal load (AC/DC) on 1-3, 1-2, control card	24 V DC 10 mA, 24 V AC 100 mA

The relay contact is separated from the rest of the circuit by strengthened isolation.

Note: Rated values resistive load - cosphi >0.8 for up to 300,000 operations.
Inductive loads at cosphi 0.25 approximately 50% load or 50% life time.

Cable lengths and cross-sections:	
Max. motor cable length, shielded/armored cable	131 ft [40 m]
Max. motor cable length, unshielded/unarmored cable	246 ft [75 m]
Max. motor cable length, shielded/armored cable and motor coil	328 ft [100 m]
Max. motor cable length, unshielded/unarmored cable and motor coil	656 ft [200 m]
Max. motor cable length, shielded/armored cable and RFI/1B filter	200 V, 328 ft [100 m]
Max. motor cable length, shielded/armored cable and RFI/1B filter	400 V, 82 ft [25 m]
Max. motor cable length, shielded/armored cable and RFI 1B/LC filter	400 V, 82 ft [25 m]

Max. cross-section to motor, see next section.

Max. cross-section to control wires, rigid wire	0.0023 in.^{2} [1.5 mm^2]/16 AWG (2 x 0.0012 in.^{2} [2 x 0.75 mm^2])
Max. cross section to control cables, flexible cable	0.0016 in.^{2} [1 mm^2]/18 AWG
Max. cross-section to control cables, cable with enclosed core	0.00078 in.^{2} [0.5 mm^2]/20 AWG

When complying with EN 55011 1A and EN 55011 1B, the motor cable must be reduced in certain instances. See EMC emission.

Control characteristics:	
Frequency range	0.2 - 132 Hz, 1 - 1000 Hz
Resolution of output frequency	0.013 Hz, 0.2 - 1000 Hz
Repeat accuracy of *Precise start/stop* (terminals 18, 19)	≤ ± 0.5 msec
System response time (terminals 18, 19, 27, 29, 33)	≤ 26.6 msec
Speed control range (open-loop)	1:10 of synchronous speed
Speed control range (closed-loop)	1:120 of synchronous speed
Speed accuracy (open-loop)	150 - 3600 rpm: Max. error of ±23 rpm
Speed accuracy (closed-loop)	30 - 3600 rpm: Max. error of ±7.5 rpm

All control characteristics are based on a 4-pole asynchronous motor

1

Surroundings:	
Enclosure	IP 20
Enclosure with options	NEMA 1
Vibration test	0.7 g
Max. relative humidity	5%–93% during operation
Ambient temperature	Max. 113°F [45°C] (24-hour average max. 104°F [40°C])
Derating for high ambient temperature, see special conditions in the Design Guide	
Min. ambient temperature during full-scale operation	32°F [0°C]
Min. ambient temperature at reduced performance	14°F [- 10°C]
Temperature during storage/transport	-13°–+149°/158°F [-25°–+65°/70°C]
Max. altitude above sea level	3280 ft [1000 m]
Derating for high air pressure, see special conditions in the Design Guide	
EMC standards, Emission	EN 61000-6-4, EN 61800-3, EN 55011
EMC standards, Immunity	EN 61000-6-1/2, EN 61000-4-2, EN 61000-4-3, EN 61000-4-4, EN 61000-4-5, EN 61000-4-6, EN 61800-3
See section on special conditions in the Design Guide	

Safeguards:

- Electronic thermal motor protection against overload.
- Temperature monitoring of the power module ensures that the adjustable frequency drive cuts out if the temperature reaches 212°F [100°C]. An overload temperature cannot be reset until the temperature of the power module is below 158°F [70°C].

1.12 Special Conditions

1.12.1 Aggressive Environments

The adjustable frequency drive is not to be installed in environments, where liquids, particles or gases are in the air that would impact and damage the electronics. Unless the necessary measures are taken to protect the adjustable frequency drive, there is a risk of stoppages, which reduce the service life of the adjustable frequency drive.

Aggressive gases, such as sulfur, nitrogen and chlorine compounds, together with high humidity and temperature, facilitate possible chemical processes on the components of the adjustable frequency drive. These chemical processes quickly impact and damage the electronics. In these areas, cabinet fitting with fresh-air circulation in the cabinet is recommended, thereby ensuring that aggressive gases are kept away from the adjustable frequency drive.

NOTE!
Fitting of adjustable frequency drives in aggressive environments increases the risk of stoppages, in addition to considerably reducing the service life of the unit.

Before the adjustable frequency drive is installed, it must be checked whether there are liquids, particles or gases in the air. This can be done by looking at existing installations in the same environment. Typical indicators of harmful airborne liquids are water or oil on metal parts or corrosion of metal parts. Too many dust particles are typically observed on top of installation cabinets

and on existing electrical installations. Indicators that there are aggressive gases in the air are copper rails and cable ends that are black on existing electrical installations.

1.12.2 Derating for Ambient Temperature

The ambient temperature measured over 24 hours should be at least [41°F 5°C] lower than the max. ambient temperature.
If the adjustable frequency drive is operated above 113°F [45°C], the continuous output current should be decreased.

1.12.3 Derating for Low Air Pressure

Above 3280 ft [1000 m] the ambient temperature or max. output current must be derated.
For altitudes above 6,600 feet [2000 m], please contact Danfoss regarding PELV.

1.12.4 Derating for Running at Low Speeds

When a motor is connected to an adjustable frequency drive, it is necessary to make sure that the cooling of the motor is adequate.
A problem may occur at low speeds in constant torque applications. Running continuously at low speeds – below half the nominal motor speed – may require additional air cooling. Alternatively, choose a larger motor (one size up).

1.12.5 Derating for Long Motor Cables

The adjustable frequency drive has been tested using a 246 ft [75 m] unshielded/unarmored cable and a 82 ft [25 m] shielded/armored cable and has been designed to work using a motor cable with a rated cross-section. If a cable with a larger cross-section is required, it is recommended to reduce the output current by 5% for each step the cable cross-section is increased. (Increased cable cross-section leads to increased capacitance to ground, and thus to an increased ground leakage current).

1.12.6 Derating for High Switching Frequency

The adjustable frequency drive will automatically derate the rated output current $I_{VLT,N,}$ when the switching frequency exceeds 4.5 kHz.
In both cases, the reduction is carried out linearly, down to 60% of $I_{VLT,N}$.